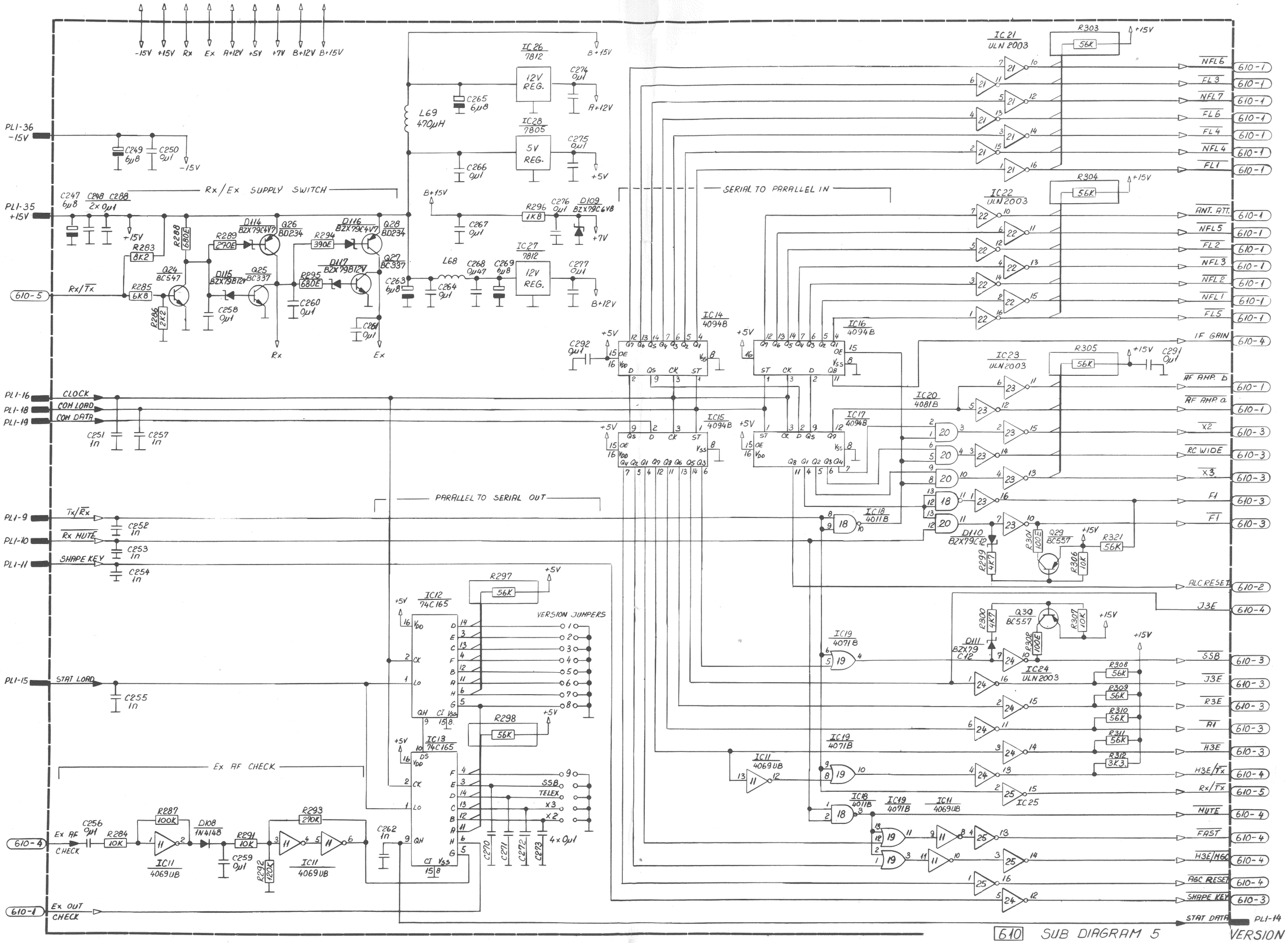
-15V +15V Rx Ex A+12V +5V +7V B+12V B+15V
PL1-36 -15V
PL1-35 +15V
610-5 Rx/Tx
Rx/Ex SUPPLY SWITCH
IC26 7812 12V REG.
IC28 7805 5V REG.
IC27 7812 12V REG.
L69 470µH
L68
SERIAL TO PARALLEL IN
IC21 ULN 2003
IC22 ULN2003
IC23 ULN2003
IC24 ULN 2003
IC14 4094B
IC15 4094B
IC16 4094B
IC17 4094B
IC20 4081B
IC18 4011B
IC19 4071B
IC11 4069UB
IC25
PL1-16 CLOCK
PL1-18 COM LOAD
PL1-19 COM DATA
PARALLEL TO SERIAL OUT
PL1-9 Tx/Rx
PL1-10 Rx MUTE
PL1-11 SHAPE KEY
PL1-15 STAT LOAD
IC12 74C165
IC13 74C165
VERSION JUMPERS
SSB
TELEX
x3
x2
Ex AF CHECK
610-4 Ex AF CHECK
610-1 Ex OUT CHECK
NFL6
FL3
NFL7
FL6
FL4
NFL4
FL1
ANT. ATT.
NFL5
FL2
NFL3
NFL2
NFL1
FL5
IF GAIN
RF AMP. b
RF AMP. a
X2
RC WIDE
X3
F1
ALC RESET
J3E
SSB
J3E
R3E
A1
H3E
H3E/Tx
Rx/Tx
MUTE
FAST
H3E/MGC
AGC RESET
SHAPE KEY
STAT DATA
PL1-14
610 SUB DIAGRAM 5
VERSION 3A